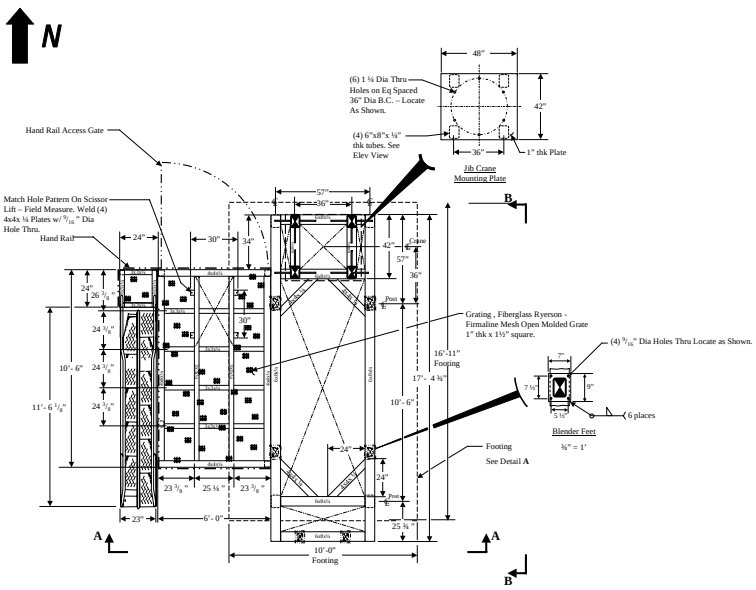

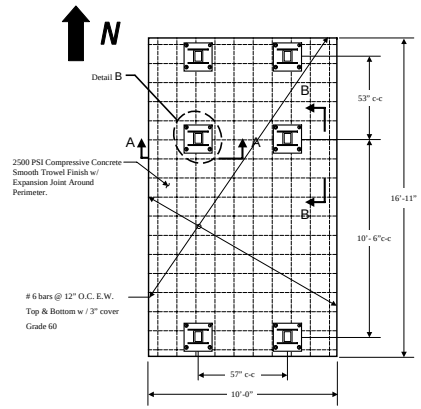

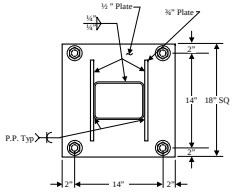

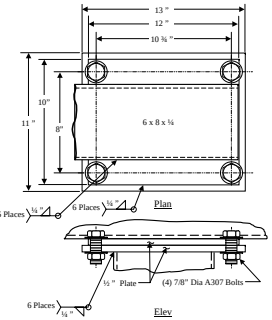

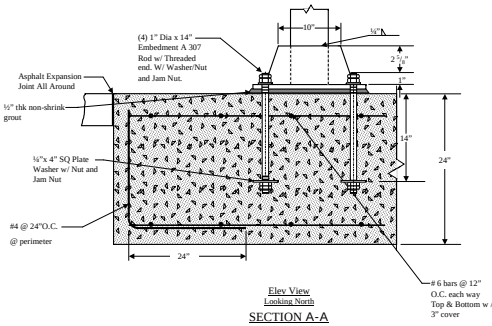

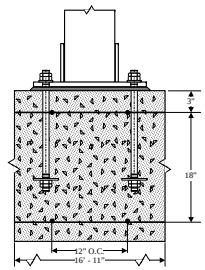

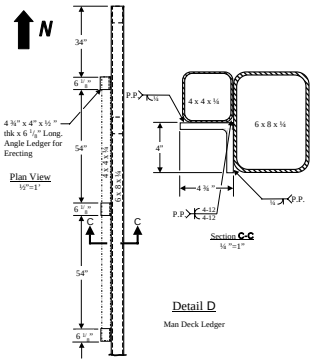

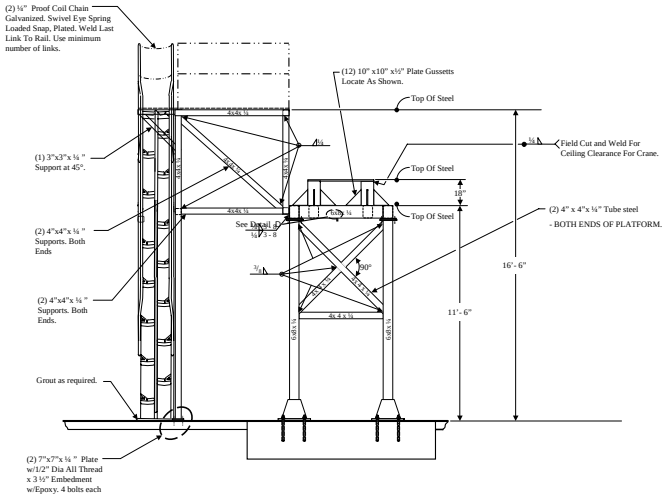

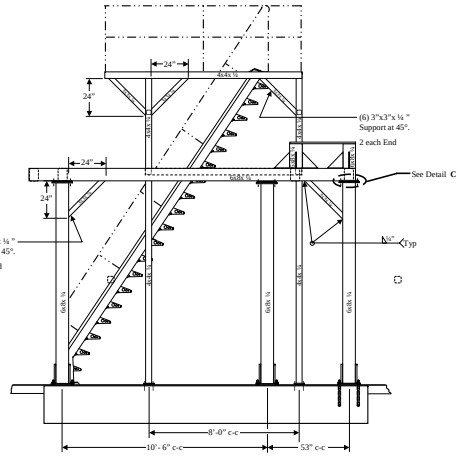

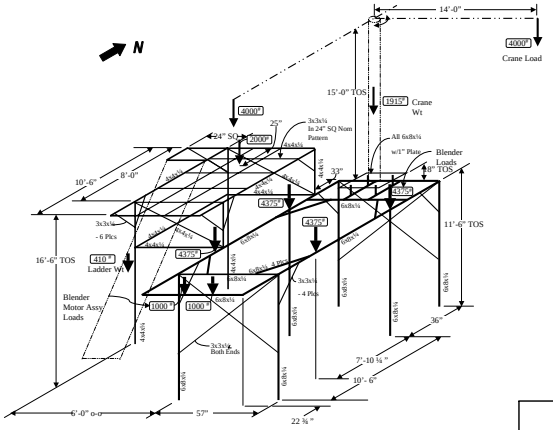

NOTES

1. All work shall conform to the AISC code of standard practice. All connections and details shall conform to the standards of the AISC.
2. Steel Beam shapes to conform to ASTM A572 Grade 50.(mild steel)
3. Plate shall conform to ASTM A36. (mild steel)
4. High strength bolts shall conform to ASTM A325. (mild steel)
5. Anchor bolts shall conform to ASTM A307 or ASTM A36. .(mild steel)
6. For all high strength bolts, hardened washers shall be provided under the turning element of bolt for required torque.
7. All welding shall conform to the American Welding Society.
8. All fillet welds unless noted otherwise on drawings or by typical details shall be in accordance with AWS D1.1 table 2.2.
9. E70 Electrodes for all field and shop welding shall conform to ANSI/AWS D1.1-96. All welds not shown shall be AWS minimum.
10. All beams shall be fabricated with the natural camber up.
11. Splicing structural members where not detailed on the structural drawings is prohibited without prior approval of the Structural Engineer.
12. 13. All fiberglass grating to be green, Ryerson - Firmaline Mesh Open Molded Grate 1" thk x 1 ½ " square,.63 LB/SQFT, Ryerson #PFGG98B213.
13. All steel is to painted with red oxide primer.
14. All frame assemblies must be able to fit through an 8' x 8' door opening.
15. All steel is to be A500 Tube steel U.O.N.

millennium Architecture
PO Box 37 Hayward CA 94543
p: 510.732.2774 f: 510.732-2841
All Rights Reserved

A 4/3/03 by	Released for Construction Bid	

Structural Design

SAMPLE

Structural Engineering Plan

Hayward,CA

Scale : 3/8"=1'	by : M McCarron	E – ARCH
REV : A	Date : 3/31/03	